CoRoSol
Technology for construction !

Build faster by bringing BIM models to the field !

CoRoSol

Hamza BOULANDOUM

Value Proposition

- ✓ CoRoSol (Construction Robotics Solutions) is an innovative robotics company focused on revolutionizing the construction sector in Africa. Our mission is to reduce inefficiencies in the industry by building robots that can perform tasks in an optimal and cost-effective way. Our first area of focus is addressing the problem of manual tracing, which is known to be imprecise and time-consuming.

- ✓ Our innovative technological solution offers a precise and efficient alternative to traditional manual tracing. With our robot, construction companies in Africa can save a significant amount of money, time, and effort while achieving higher levels of precision and accuracy in their construction projects. Our robot will enable companies to complete tasks in a reasonable amount of time, allowing them to take on more projects and improve their bottom line.

- ✓ By leveraging the power of robotics, CoRoSol is poised to transform the construction industry in Africa, bringing significant benefits to companies and individuals across the continent.

Problem : Manual Tracing

- ***Inaccuracy of traditional tracing methods*** *especially those used by small and medium size construction companies.*
- ***Waste of time****, the methods that are us ed take a lot of time and effort.*
- ***Problem of organization and communic ation in the construction site****, between workers and managers: This problem slows down the process and therefore leads to the loss of money.*

Proposed Solution : Robot

- *A mobile platform*

Platform that prints the BIM layout and construction plans on the field.

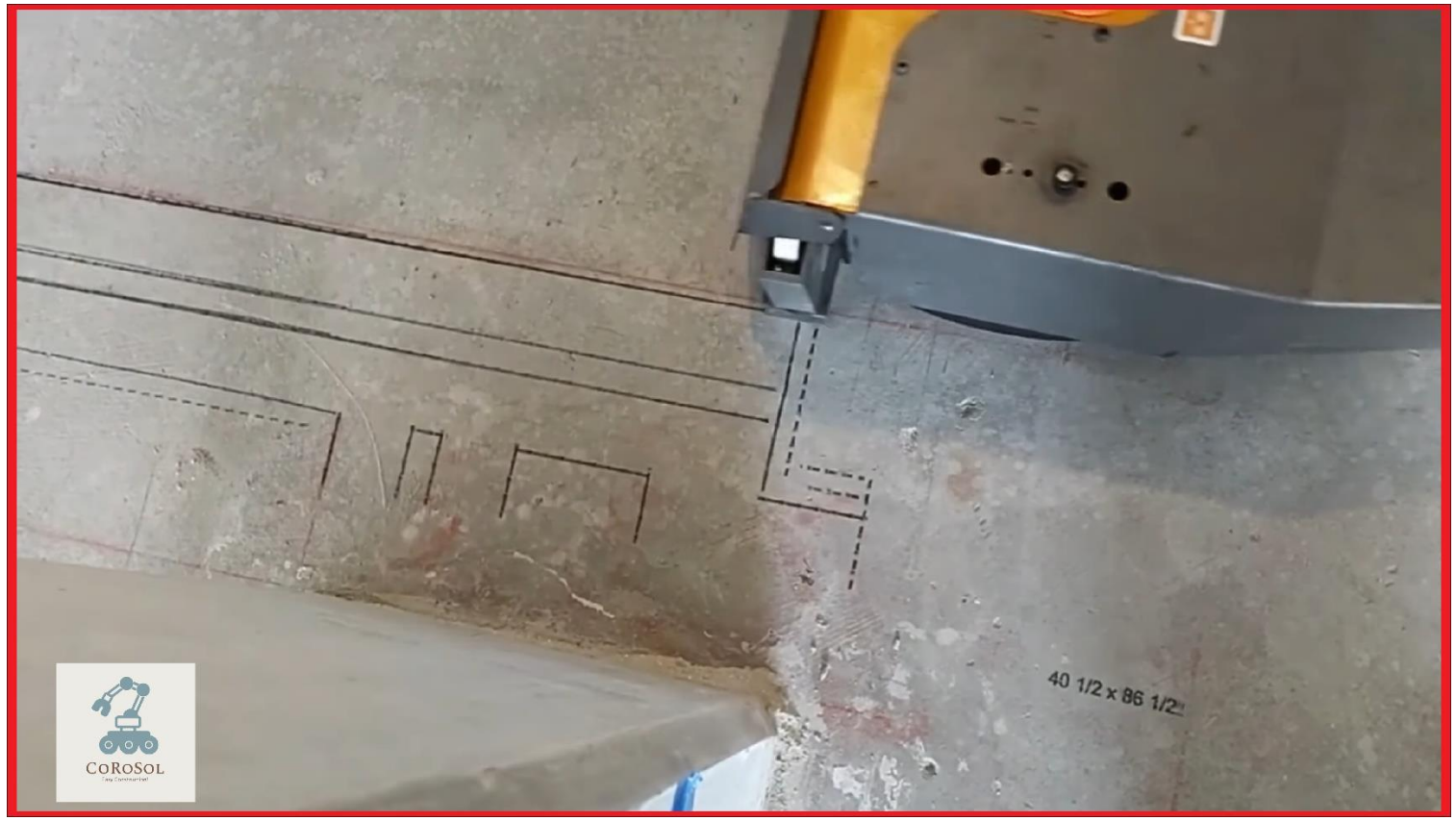

Contacting actors: Verification of the need

CoRoSol
Technology for construction !

STE AMENAL

Confirmation of the problem of inaccuracy and time.

Proposal to test the prototype in one of the present worksites.

E.Z.F Entreprise Zerkdi&Fils

Confirmation of the problem of inaccuracy that appears at the level of the finishing cm/mm.

Accept to test , provided that the price is reasonable.

JESA JACOBS Engineering SA

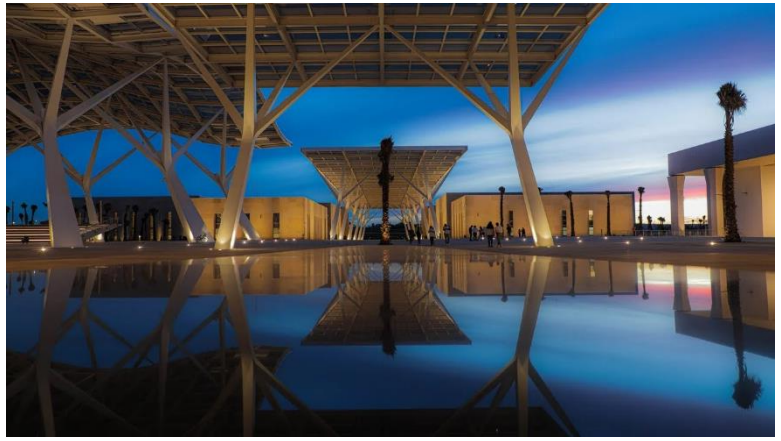

Confirmation of the problem of imprecision. Ready to try as soon as possible. Ready to Partner for future solutions.

Contacting Actors : Conclusion

CoRoSol
Technology for construction !

The companies confirm:

- The presence of a real need for automation.
- The inaccuracy of traditional methods affects the finishing stage in which all defects end errors appear since the scale is in MM.
- They will be willing to switch if the price is reasonable and beneficial to them.

Result:

- We have to launch the first prototype and estimate the production costs.

Investment Opportunity

CoRoSol
Technology for construction !

Medium size construction company

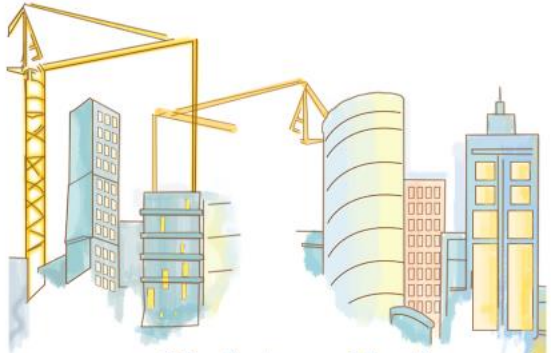

4 Projects per Month

Tracing Team of 4 members

Tracing cost per Month : 4 × 4 × 4 × 4 × 150 = 38 400 DH

Tracing cost per year : 38 400 × 12 = 460 800 DH

Robot Cost :

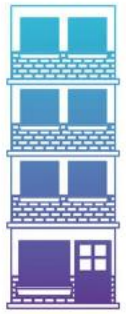

4 Floors average per project

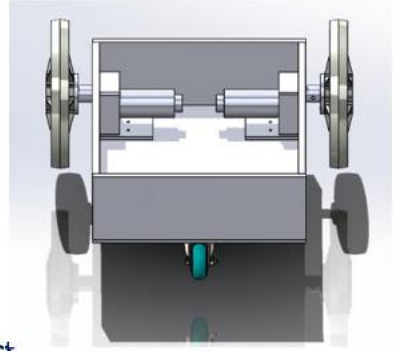

< 150 000 DH

A floor takes 4 days of tracing as average

150 DH per day

HIGH ROI

Prototype: 3D SolidWorks model

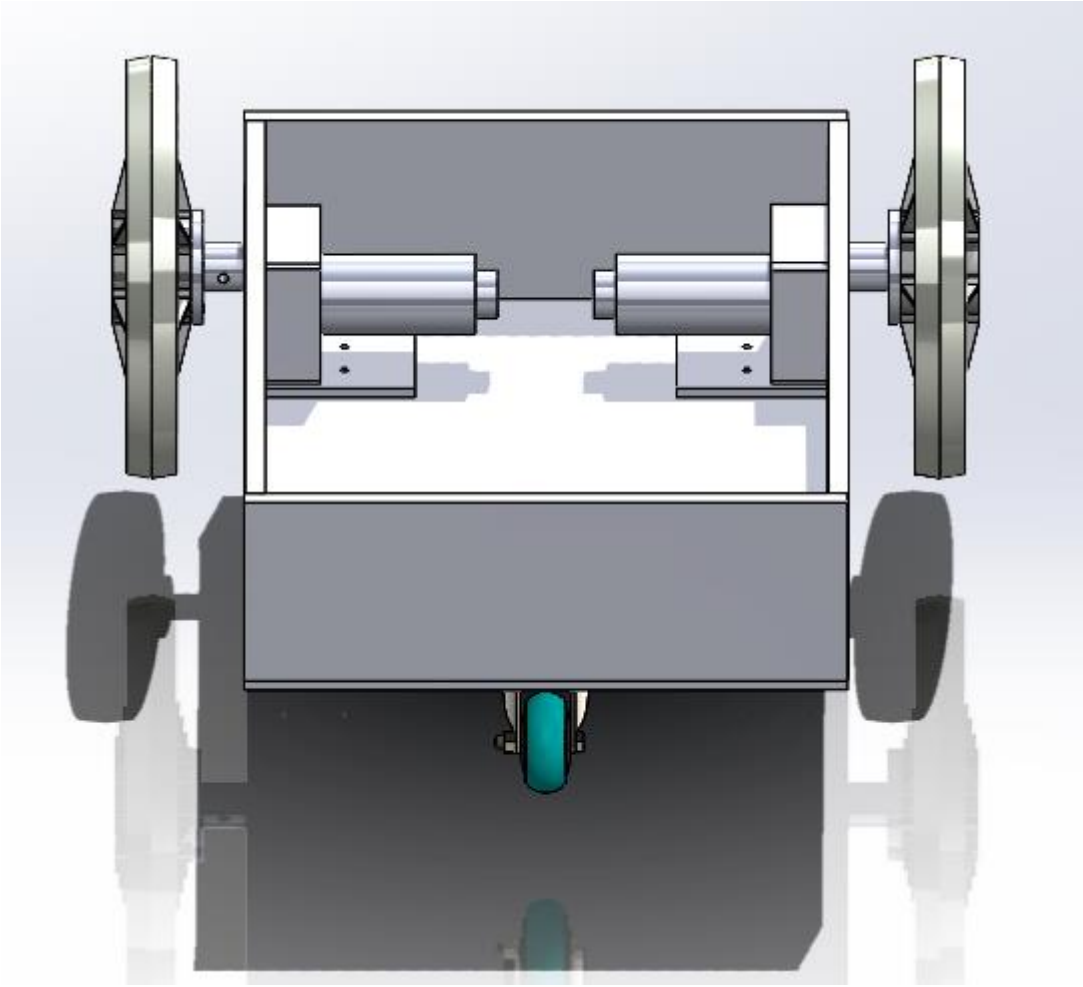

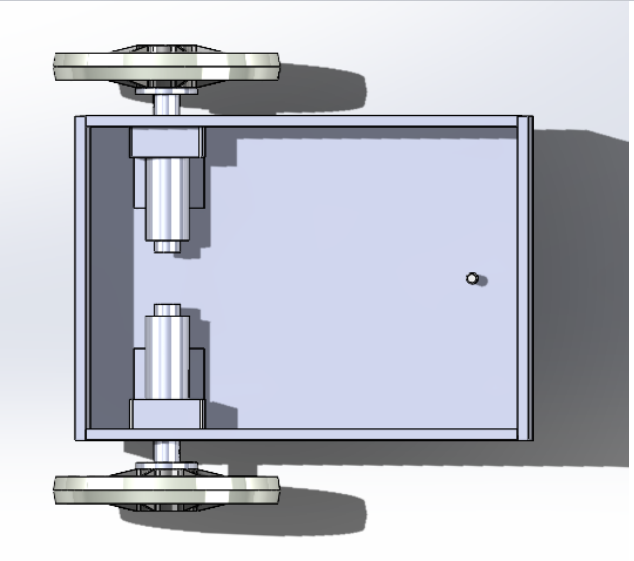

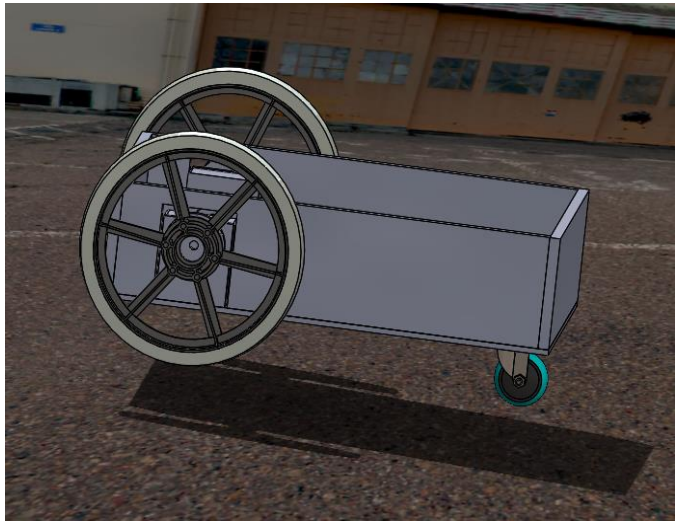

Prototype: Algorithm

1- AutoCad:

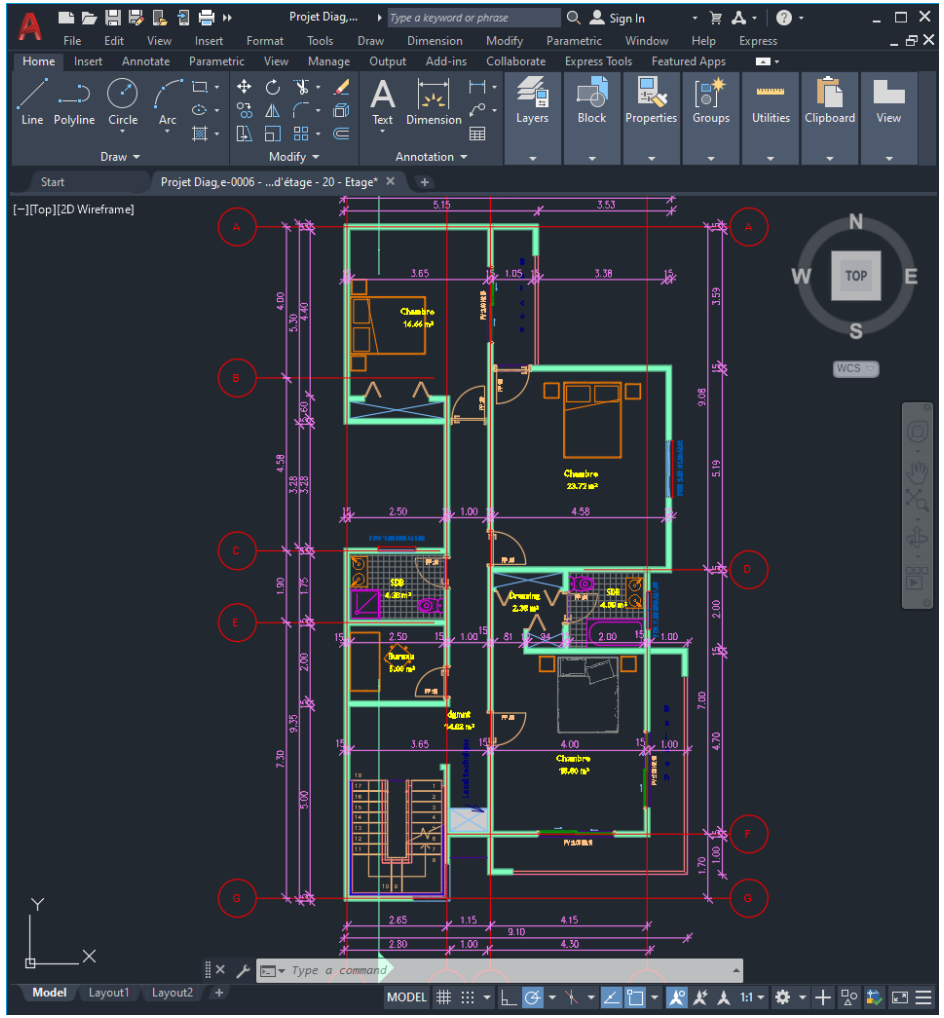

2-Data Extraction:

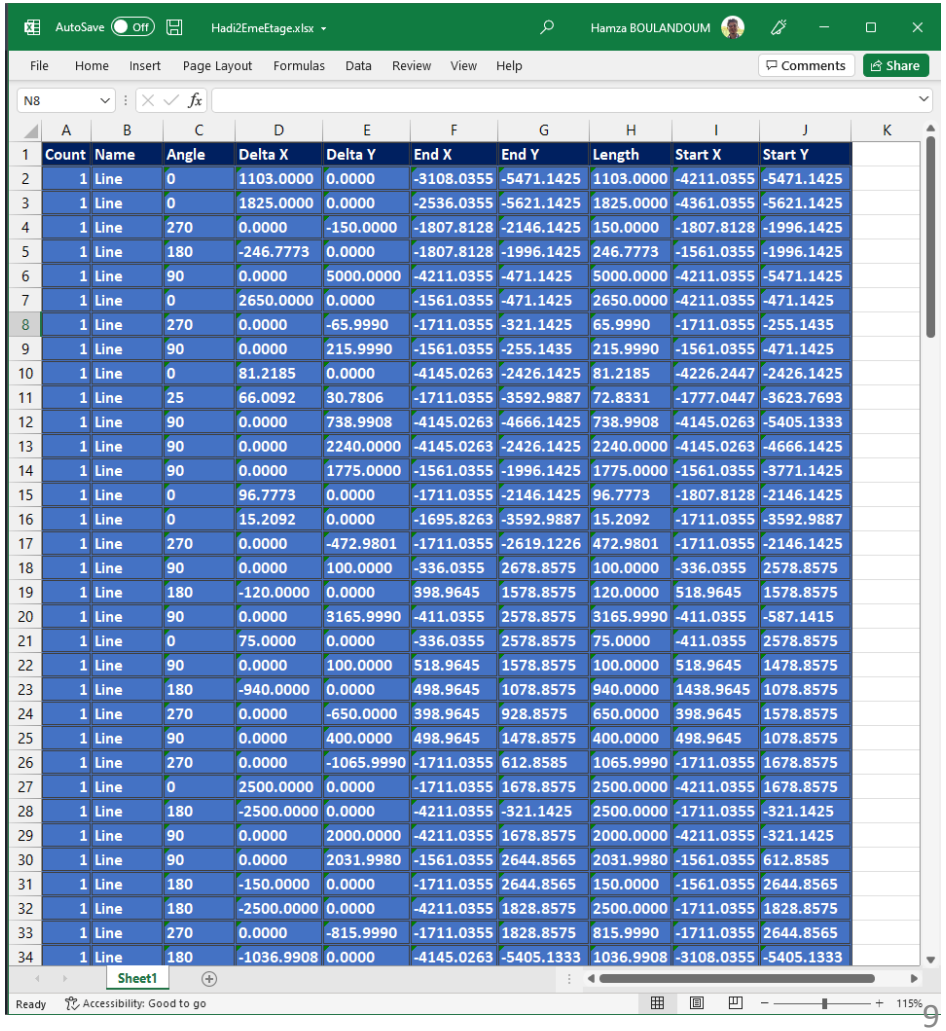

Count	Name	Angle	Delta X	Delta Y	End X	End Y	Length	Start X	Start Y
1	Line	0	1103.0000	0.0000	-3108.0355	-5471.1425	1103.0000	-4211.0355	-5471.1425
1	Line	0	1825.0000	0.0000	-2536.0355	-5621.1425	1825.0000	-4361.0355	-5621.1425
1	Line	270	0.0000	-150.0000	-1807.8128	-2146.1425	150.0000	-1807.8128	-1996.1425
1	Line	180	-246.7773	0.0000	-1807.8128	-1996.1425	246.7773	-1561.0355	-1996.1425
1	Line	90	0.0000	5000.0000	-4211.0355	-471.1425	5000.0000	-4211.0355	-5471.1425
1	Line	0	2650.0000	0.0000	-1561.0355	-471.1425	2650.0000	-4211.0355	-471.1425
1	Line	270	0.0000	-65.9990	-1711.0355	-321.1425	65.9990	-1711.0355	-255.1435
1	Line	90	0.0000	215.9990	-1561.0355	-255.1435	215.9990	-1561.0355	-471.1425
1	Line	0	81.2185	0.0000	-4145.0263	-2426.1425	81.2185	-4226.2447	-2426.1425
1	Line	25	66.0092	30.7806	-1711.0355	-3592.9887	72.8331	-1777.0447	-3623.7693
1	Line	90	0.0000	738.9908	-4145.0263	-4666.1425	738.9908	-4145.0263	-5405.1333
1	Line	90	0.0000	2240.0000	-4145.0263	-2426.1425	2240.0000	-4145.0263	-4666.1425
1	Line	90	0.0000	1775.0000	-1561.0355	-1996.1425	1775.0000	-1561.0355	-3771.1425
1	Line	0	96.7773	0.0000	-1711.0355	-2146.1425	96.7773	-1807.8128	-2146.1425
1	Line	0	15.2092	0.0000	-1695.8263	-3592.9887	15.2092	-1711.0355	-3592.9887
1	Line	270	0.0000	-472.9801	-1711.0355	-2619.1226	472.9801	-1711.0355	-2146.1425
1	Line	90	0.0000	100.0000	-336.0355	2678.8575	100.0000	-336.0355	2578.8575
1	Line	180	-120.0000	0.0000	398.9645	1578.8575	120.0000	518.9645	1578.8575
1	Line	90	0.0000	3165.9990	-411.0355	2578.8575	3165.9990	-411.0355	-587.1415
1	Line	0	75.0000	0.0000	-336.0355	2578.8575	75.0000	-411.0355	2578.8575
1	Line	90	0.0000	100.0000	518.9645	1578.8575	100.0000	518.9645	1478.8575
1	Line	180	-940.0000	0.0000	498.9645	1078.8575	940.0000	1438.9645	1078.8575
1	Line	270	0.0000	-650.0000	398.9645	928.8575	650.0000	398.9645	1578.8575
1	Line	90	0.0000	400.0000	498.9645	1478.8575	400.0000	498.9645	1078.8575
1	Line	270	0.0000	-1065.9990	-1711.0355	612.8585	1065.9990	-1711.0355	1678.8575
1	Line	0	2500.0000	0.0000	-1711.0355	1678.8575	2500.0000	-4211.0355	1678.8575
1	Line	180	-2500.0000	0.0000	-4211.0355	-321.1425	2500.0000	-1711.0355	-321.1425
1	Line	90	0.0000	2000.0000	-4211.0355	1678.8575	2000.0000	-4211.0355	-321.1425
1	Line	90	0.0000	2031.9980	-1561.0355	2644.8565	2031.9980	-1561.0355	612.8585
1	Line	180	-150.0000	0.0000	-1711.0355	2644.8565	150.0000	-1561.0355	2644.8565
1	Line	180	-2500.0000	0.0000	-4211.0355	1828.8575	2500.0000	-1711.0355	1828.8575
1	Line	270	0.0000	-815.9990	-1711.0355	1828.8575	815.9990	-1711.0355	2644.8565
1	Line	180	-1036.9908	0.0000	-4145.0263	-5405.1333	1036.9908	-3108.0355	-5405.1333

Prototype: Algorithm

3- Demonstration :

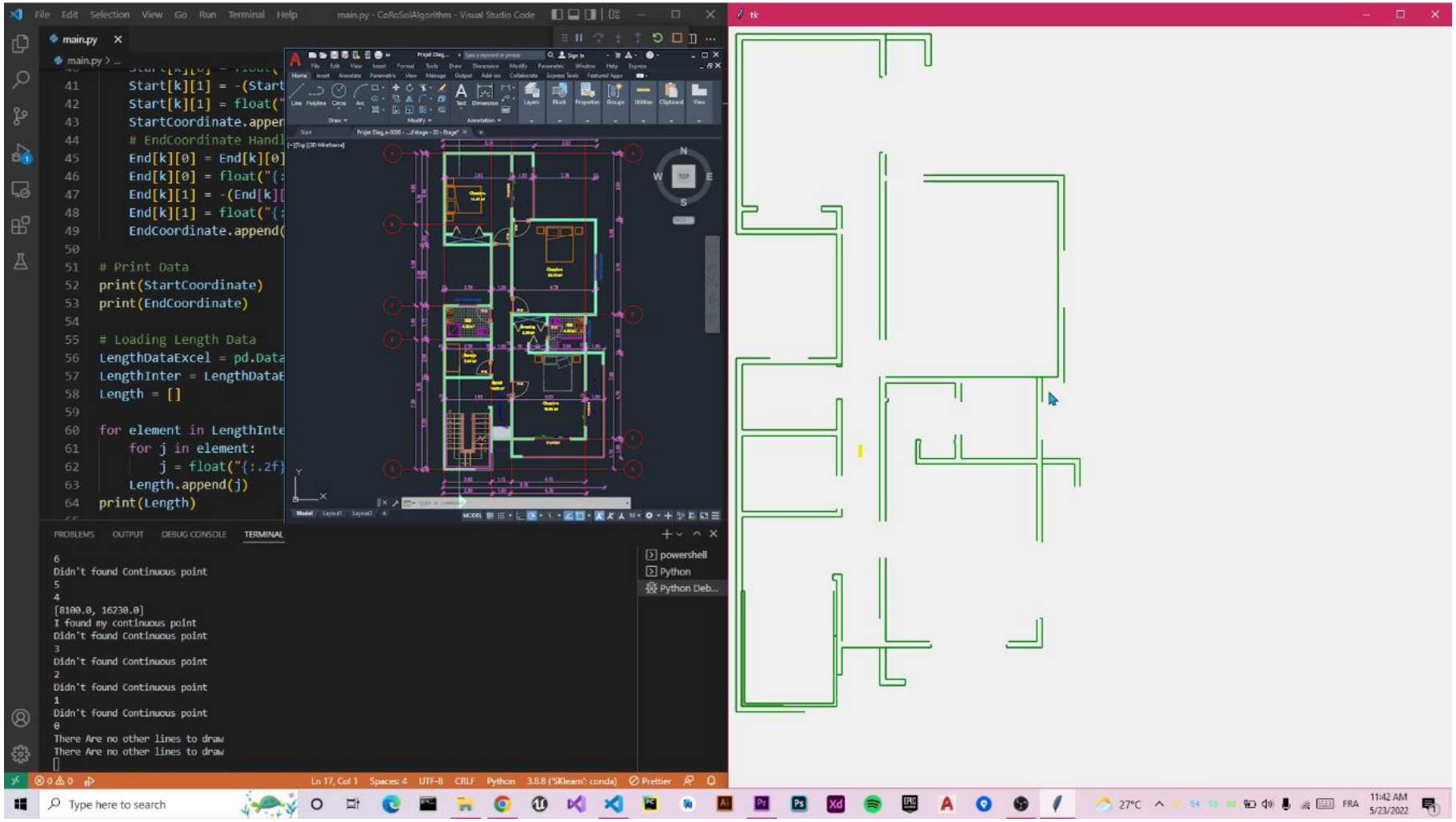

Business Model Canvas

CoRoSol
Technology for construction !

Key Partners

Ventures funds : Such as Explorer that could provide business advice and financial support for the StarUp.
Big Construction Companies : They could be our early adopters and we could develop the product with the help of their feedback and their knowledge of the construction sector.
Shipping company : we could partner with a shipping company at first to secure the delivery of our products.
UM6P : The university could help us aquire more customers by publishing our service and introducing it to media. They could also provide technical support for our engineers throught research and development.

Key Activities

Research and development Team : company must always look for problems in construction and try to solve them using robotics solutions.
manufacturing Team : Company must have an active industrial plant in which the robots are made.
Robotics Teams : Each team works on a specified robot.
Maintenance : Company must have a maintenance team that is providing support to our clients.
Business Team: Company must have a business deparment that is responsible of handling The different business aspects.
Legal Team : Team that defends the company and protects it's patens and licences.

Key Resources

Finance : We need capital in order to be able to launch the development of our first products.
Physical : we need a factory to make the robots, we need vans to deliver robots for clients.
Human : We need a great team of engineers to develop the robots, and a team of business people to keep our relations with customers.
Intellectual: we need to have patents for our robots to protect them.

Value Propositions

CoRoSol is a robotics company that is dedicated to sloving construction problems using robotics solutions.
The first problem that we will address is the problem of manual tracing which is imprecise and takes a lot of time and effort.
We propose an innovative technological solution that will do the task with high precision and in a reasonable amount of time compared to traditional methods.
The robot we offer will make construction companies save a lot of money, time and effort.

Customer Relationship

Our customers could expect a maintenance service from us, Throught this service we help them solve the problems that they face using the robot.
we could also take feedback from their experience and work on improving the solution more and more.

Channels

we will have physical and digital channels.
Customers could contact us directly on our website and seek our service.
They could either purchase the robot from the website and we deliver it to them. or rent the robot for a specified period of time.

Customer Segments

Our customers are architects , geometers , engineers , construction and civil engineering companies in general.
The solution will be mostly beneficial for Medium size construction companies and above. These are companies that are working on medium and big projects over the year and that aspire to deliver high quality buildings to their clients.
These companies give also much higher importance to the deadlines.

Cost Structure

Salary of employees.
Cost of materials for building robots. (Aluminum, plastic, plexiglass, iron …)
Cost of software licences used. (Autocad, Solidworks, Networking software …)
Cost of hardware and electronic components used in robots.
Cost of marketing and advertisement.
Cost of machines that makes the parts. (CNC, 3D printers, laser cutting …)
Cost of delivery.
Cost of water and electricity.
Cost of travel to meet clients and make partnerships.

Revenue Streams

Customers can buy the robot , and pay a certain amount for regular maintenance.
They could also rent the robot.

Next Steps

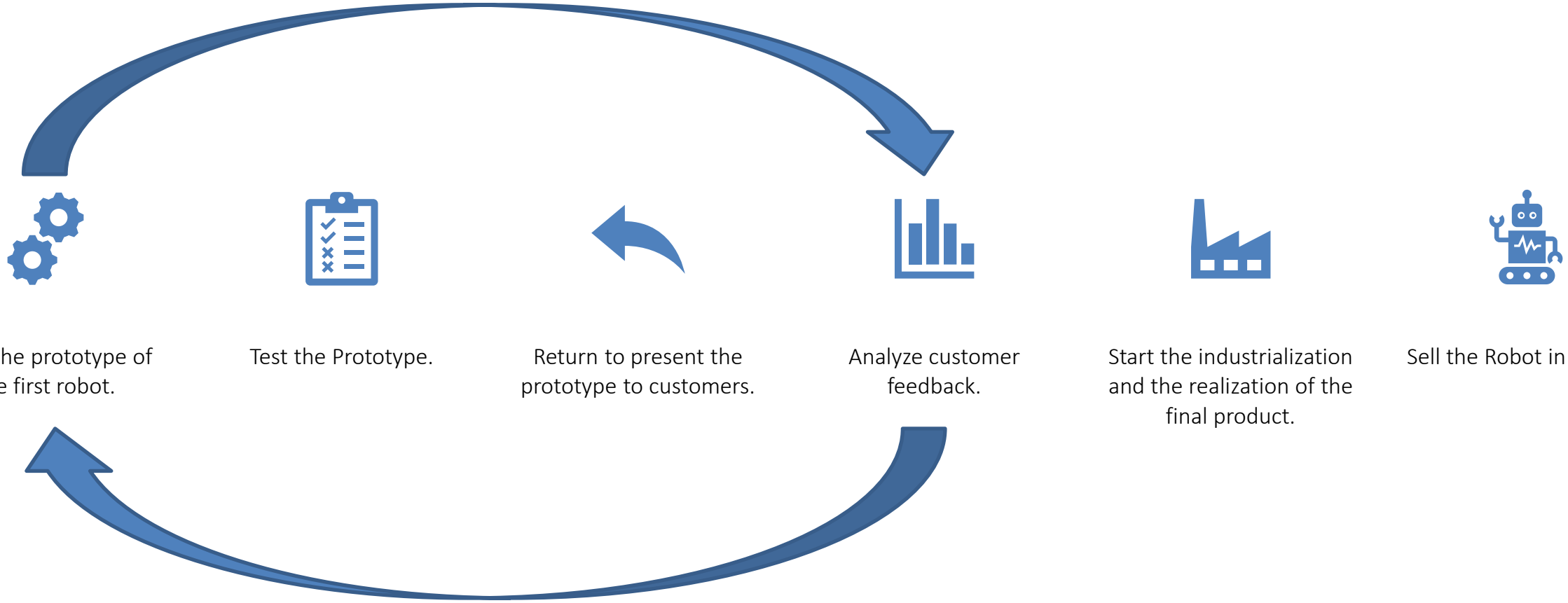
Build the prototype of the first robot.
Test the Prototype.
Return to present the prototype to customers.
Analyze customer feedback.
Start the industrialization and the realization of the final product.
Sell the Robot in Market.

Competition ?

DUSTY ROBOTICS

2019

BIM PRINTER

2021

Founder

Name : Hamza BOULANDOUM
Email : Hamza.Boulandoum@emines.um6p.ma
Phone : +212 688104961
LinkedIn : Hamza BOULANDOUM

Industrial Management Engineering Student

THANK YOU.

CoRoSol
Technology for construction !